DATA SHEET

Overvoltage Protection

ProTec T2 1+0

Class II • Type 2 • Type 1CA • Open Type 1 SPD Listed

Location of Use:	Sub-Distribution Boards
Network Systems:	TN-S, TN-C, TT (only L-N)
Mode of Protection:	L-PE, N-PE (only TN-S), L-PEN, L-N
IEC/EN/UL Category:	Class II / Type 2 / Type 1CA Open Type 1 SPD Listed
Housing:	Pluggable Design
Compliance:	IEC 61643-11:2011 EN 61643-11:2012+A11:2018 UL 1449 5th Edition

Technical Data

ProTec T2-xxx-1+0 (-R) & ProTec T2-xxx-1+0-US(-R)		75	150	300	350	440**	480	550***	750
IEC Electrical									
Nominal AC Voltage (50/60Hz)	U_o/U_n	60V	120V	240V	277V	230V	400V	480V	600V
Maximum Continuous Operating Voltage (AC)	U_c	75V	150V	300V	350V	440V	480V	550V	750V
Nominal Discharge Current (8/20µs)	I_n	20kA	20kA	20kA	20kA	20kA	20kA	20kA	20kA
Maximum Discharge Current (8/20µs)	I_{max}	50kA	50kA	50kA	50kA	50kA	50kA	50kA	35kA
Voltage Protection Level	U_p	800V	1250V	1500V	1750V	1800V	2300V	2500V	3400V
Response Time	t_A	< 25ns							
Overcurrent Protection (max)		315A / 250A gG							
Short-Circuit Current Rating (AC)	I_{SCCR}	25kA / 50kA							
TOV Withstand 5s	U_T	114V	229V	337V	403V	440V	581V	697V	871V
TOV 120min	U_T	114V	229V	442V	529V	440V	762V	915V	1143V
	mode	Withstand	Withstand	Safe Fail	Safe Fail	Withstand	Safe Fail	Safe Fail	Safe Fail
Number of Ports		1							
UL Electrical									
Maximum Continuous Operating Voltage (AC)	MCOV	75V	150V	300V	350V	-	480V	550V	750V
Voltage Protection Rating	VPR	330V	600V	900V	1000V	-	1500V	2000V	2500V
Nominal Discharge Current (8/20µs)	I_n	20kA	20kA	20kA	20kA	-	20kA	20kA	20kA
Short-Circuit Current Rating (AC)	SCCR	100kA	200kA	150kA	200kA	-	200kA	200kA	200kA
Additional Electrical Parameters - Standard *(Tests performed within Raycap testing laboratory only)*									
Residual Voltage at 5 kA (8/20 µs)	U_{res}	400V	750V	1000V	1300V	1400V	1500V	1800V	2500V
Overcurrent Protection (min)		80A gG							
Additional Electrical Parameters - Extended *(Additionally tested by VDE)*									
Short-Circuit Current Rating (AC)	I_{SCCR}	100kA							
Overcurrent Protection (max)		250A gG							
Mechanical & Environmental									
Operating Temperature Range	T_a	-40 °F to +185 °F [-40 °C to +85 °C]							
Permissible Operating Humidity	RH	5%...95%							
Altitude (max)		13123 ft [4000m]							
Terminal Screw Torque	M_{max}	35 lbf·in per UL 1499 [4.5 Nm]							
Conductor Cross Section (max)		6AWG (Solid, Stranded) per UL 1449							
		35mm² (Solid, Stranded) / 25mm² (Flexible)							
Mounting		35mm DIN Rail, EN 60715							
Degree of Protection		IP 20 (built-in)							
Housing Material		Thermoplastic: Extinguishing Degree UL 94 V-0							
Thermal Protection		Yes							
Operating State / Fault Indication		Green Flag / Not Green Flag							
Remote Contacts (RC)		Optional							
RC Switching Capacity		AC: 250V/1A, 125V/1A; DC: 48V/0.5A, 24V/0.5A, 12V/0.5A							
RC Conductor Cross Section (max)		10AWG (Solid, Stranded) per UL 1449 [1.5mm² (Solid)]							

***No VDE and UL certification.*
****No VDE certification.*

Technical Data includes technical values for both UL Recognized and Open Type 1 UL Listed products.
Mechanical Data includes only techincal values for Open Type 1 UL Listed products.
Connection Configurations can be found in QR Code link on intro page.

RoHS COMPLIANT

Information contained in this document is subject to change at any time without notice.

Internal Configuration

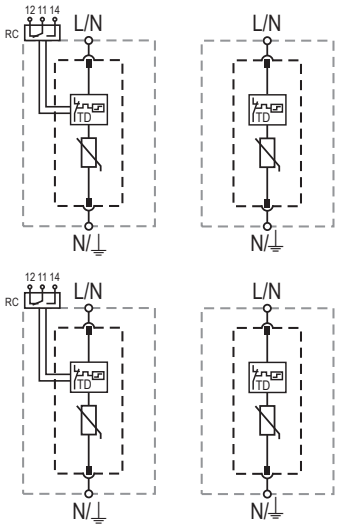

UL Listed Products

UL Recognized Products

Legend

L	*Line Conductor Terminal*
N	*Neutral Conductor Terminal*
⏚	*PE/G Conductor Terminal*
RC	*Remote Contacts Terminal (Optional)*
TD	*Thermal Disconnector*

ProTec T2-xxx-1+0 (-R)

Order Information VDE Certified and UL Recognized Products

Order Code	75	150	300	350	440**	480	550***	750
ProTec T2-xxx-1+0	59.0069	59.0071	59.0073	59.0075	59.0545	59.0077	59.0677	59.0079
ProTec T2-xxx-1+0-R (with remote contacts)	59.0070	59.0072	59.0074	59.0076	59.0546	59.0078	59.0678	59.0080
ProTec T2-xxx-P (plug)	59.0063	59.0064	59.0065	59.0066	59.0547	59.0067	59.0685	59.0068

ProTec T2-xxx-1+0-US(-R)

Order Information VDE Certified and Open Type 1 UL Listed Products

Order Code	75	150	300	350	440**	480	550***	750
ProTec T2-xxx-1+0-US	59.B071	59.B073	59.B075	59.B077	-	59.B079	59.B081	59.B083
ProTec T2-xxx-1+0-US-R (with remote contacts)	59.B072	59.B074	59.B076	59.B078	-	59.B080	59.B082	59.B084
ProTec T2-xxx-P (plug)	59.0063	59.0064	59.0065	59.0066	59.0547	59.0067	59.0685	59.0068

***No VDE and UL certification.*
****No VDE certification.*

Dimensions & Packaging

inches [mm]

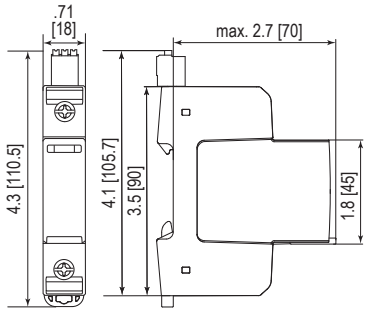

Complete Unit UL Recognized Products

ProTec T2-xxx-1+0		75	150	300	350	440**	480	550***	750
Weight	pounds	.259	.275	.281	.292	.298	.306	.311	.336
	grams	118	125	128	133	135	139	141	153
ProTec T2-xxx-1+0-R									
Weight	pounds	.275	.290	.297	.308	.313	.321	.326	.352
	grams	125	132	135	140	142	146	148	160

Complete Unit UL Listed Products

ProTec T2-xxx-1+0-US		75	150	300	350	440**	480	550***	750
Weight	pounds	.259	.275	.281	.292	.298	.306	.311	.336
	grams	118	125	128	133	135	139	141	153
ProTec T2-xxx-1+0-US-R									
Weight	pounds	.275	.290	.297	.308	.313	.321	.326	.352
	grams	125	132	135	140	142	146	148	160

DIN 43880 Dimension	1 TE / .71" [18 mm]
Packaging Dimensions (HxWxL)	4.3 x 4.5 x 13.8" [109 x 115 x 352 mm]
Standard Order Quantity	12 Units

Spare Plug

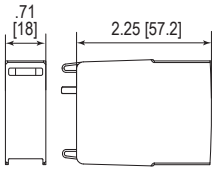

Single Unit

ProTec T2-xxx-P		75	150	300	350	440**	480	550***	750
Weight	pounds	.108	.123	.130	.141	.146	.154	.163	.185
	grams	49	56	59	64	66	70	74	84

DIN 43880 Dimension	1 TE / .71" [18mm]
Packaging Dimensions (HxWxL)	3.2 x 4.5 x 12" [83 x 116 x 305 mm]
Standard Order Quantity	24 Units

© 2022 Raycap All rights reserved.

DATA SHEET

Overvoltage Protection

ProTec T2 2+0

Class II • Type 2 • Type 1CA • Open Type 1 SPD Listed

Location of Use: Sub-Distribution Boards
Network Systems: TN-S
Mode of Protection: L-PE, N-PE
IEC/EN/UL Category: Class II / Type 2 / Type 1CA
Open Type 1 SPD Listed
Housing: Pluggable Design
Compliance: IEC 61643-11:2011
EN 61643-11:2012+A11:2018
UL 1449 5th Edition

Technical Data

ProTec T2-xxx-2+0(-R) & ProTec T2-xxx-2+0-US(-R)		75	150	300	350	440**	480	550***	750
IEC Electrical									
Nominal AC Voltage (50/60Hz)	U_o/U_n	60V	120V	240V	277V	230V	400V	480V	600V
Maximum Continuous Operating Voltage (AC)	U_c	75V	150V	300V	350V	440V	480V	550V	750V
Nominal Discharge Current (8/20µs)	I_n	20kA	20kA	20kA	20kA	20kA	20kA	20kA	20kA
Maximum Discharge Current (8/20µs)	I_{max}	50kA	50kA	50kA	50kA	50kA	50kA	50kA	35kA
Voltage Protection Level	U_p	800V	1250V	1500V	1750V	1800V	2300V	2500V	3400V
Response Time	t_A	< 25ns							
Overcurrent Protection (max)		315A / 250A gG							
Short-Circuit Current Rating (AC)	I_{SCCR}	25kA / 50kA							
TOV Withstand 5s	U_T	114V	229V	337V	403V	440V	581V	697V	871V
TOV 120min	U_T	114V	229V	442V	529V	440V	762V	915V	1143V
	mode	Withstand	Withstand	Safe Fail	Safe Fail	Withstand	Safe Fail	Safe Fail	Safe Fail
Number of Ports		1							
UL Electrical									
Maximum Continuous Operating Voltage (AC)	MCOV	75V	150V	300V	350V	-	480V	550V	750V
Voltage Protection Rating	VPR	330V	600V	900V	1000V	-	1500V	2000V	2500V
Nominal Discharge Current (8/20µs)	I_n	20kA	20kA	20kA	20kA	-	20kA	20kA	20kA
Short-Circuit Current Rating (AC)	SCCR	100kA	200kA	150kA	200kA	-	200kA	200kA	200kA
Additional Electrical Parameters - Standard *(Tests performed within Raycap testing laboratory only)*									
Residual Voltage at 5 kA (8/20 µs)	U_{res}	400V	750V	1000V	1300V	1400V	1500V	1800V	2500V
Overcurrent Protection (min)		80A gG							
Additional Electrical Parameters - Extended *(Additionally tested by VDE)*									
Short-Circuit Current Rating (AC)	I_{SCCR}	100kA							
Overcurrent Protection (max)		250A gG							
Mechanical & Environmental									
Operating Temperature Range	T_a	-40 °F to +185 °F [-40 °C to +85 °C]							
Permissible Operating Humidity	RH	5%...95%							
Altitude (max)		13123 ft [4000m]							
Terminal Screw Torque	M_{max}	35 lbf·in per UL 1499 [4.5 Nm]							
Conductor Cross Section (max)		6AWG (Solid, Stranded) per UL 1449							
		35mm² (Solid, Stranded) / 25mm² (Flexible)							
Mounting		35mm DIN Rail, EN 60715							
Degree of Protection		IP 20 (built-in)							
Housing Material		Thermoplastic: Extinguishing Degree UL 94 V-0							
Thermal Protection		Yes							
Operating State / Fault Indication		Green Flag / Not Green Flag							
Remote Contacts (RC)		Optional							
RC Switching Capacity		AC: 250V/1A, 125V/1A; DC: 48V/0.5A, 24V/0.5A, 12V/0.5A							
RC Conductor Cross Section (max)		10AWG (Solid, Stranded) per UL 1449 [1.5mm² (Solid)]							

***No VDE and UL certification.*
****No VDE certification.*

Technical Data includes technical values for both UL Recognized and Open Type 1 UL Listed products.
Mechanical Data includes only techincal values for Open Type 1 UL Listed products.
Connection Configurations can be found in QR Code link on intro page.

RoHS COMPLIANT

Information contained in this document is subject to change at any time without notice.

Internal Configuration

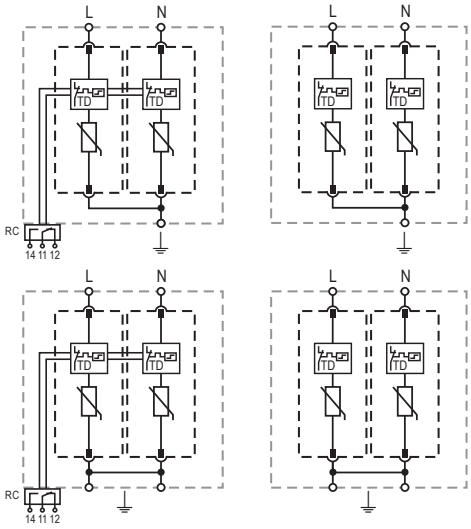

UL Listed Products

UL Recognized Products

Legend

L	*Line Conductor Terminal*
N	*Neutral Conductor Terminal*
⏚	*PE/G Conductor Terminal*
RC	*Remote Contacts Terminal (Optional)*
TD	*Thermal Disconnector*

ProTec T2-xxx-2+0(-R)

Order Information VDE Certified and UL Recognized Products

Order Code	75	150	300	350	440**	480	550***	750
ProTec T2-xxx-2+0	59.0343	59.0081	59.0083	59.0085	59.0548	59.0087	59.0679	59.0089
ProTec T2-xxx-2+0-R (with remote contacts)	59.0344	59.0082	59.0084	59.0086	59.0549	59.0088	59.0680	59.0090
ProTec T2-xxx-P (plug)	59.0063	59.0064	59.0065	59.0066	59.0547	59.0067	59.0685	59.0068

ProTec T2-xxx-2+0-US(-R)

For UL Listed products one PE/G Conductor Terminal is covered/closed.

Order Information VDE Certified and Open Type 1 UL Listed Products

Order Code	75	150	300	350	440**	480	550***	750
ProTec T2-xxx-2+0-US	59.B085	59.B087	59.B089	59.B091	-	59.B093	59.B095	59.B097
ProTec T2-xxx-2+0-US-R (with remote contacts)	59.B086	59.B088	59.B090	59.B092	-	59.B094	59.B096	59.B098
ProTec T2-xxx-P (plug)	59.0063	59.0064	59.0065	59.0066	59.0547	59.0067	59.0685	59.0068

***No VDE and UL certification.*
****No VDE certification.*

Dimensions & Packaging

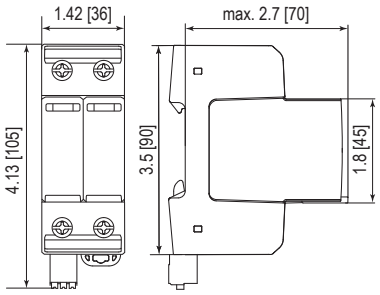

inches [mm]

Complete Unit UL Recognized Products

ProTec T2-xxx-2+0		75	150	300	350	440**	480	550***	750
Weight	pounds	.525	.556	.569	.591	.600	.618	.628	.680
	grams	238	252	258	268	272	280	285	308
ProTec T2-xxx-2+0-R									
Weight	pounds	.545	.576	.619	.611	.620	.638	.659	.699
	grams	247	261	267	272	281	289	299	317

Complete Unit UL Listed Products

ProTec T2-xxx-2+0-US		75	150	300	350	440**	480	550***	750
Weight	pounds	.505	.536	.549	.571	.580	.598	.608	.660
	grams	229	243	249	259	263	271	276	299
ProTec T2-xxx-2+0-US-R									
Weight	pounds	.525	.556	.569	.591	.600	.618	.639	.679
	grams	238	252	258	268	272	280	290	308
DIN 43880 Dimension		2 TE / 1.42" [36]							
Packaging Dimensions (HxWxL)		4.3 × 4.5 × 13.8" [109 × 115 × 352 mm]							
Standard Order Quantity		7 Units							

Spare Plug

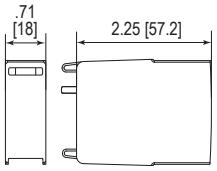

Single Unit

ProTec T2-xxx-P		75	150	300	350	440**	480	550***	750
Weight	pounds	.108	.123	.130	.141	.146	.154	.163	.185
	grams	49	56	59	64	66	70	74	84
DIN 43880 Dimension		1 TE / .71" [18]							
Packaging Dimensions (HxWxL)		3.2 × 4.5 × 12" [83 × 116 × 305 mm]							
Standard Order Quantity		24 Units							

© 2022 Raycap All rights reserved.

DATA SHEET

Overvoltage Protection

ProTec T2 3+0

Class II • Type 2 • Type 1CA • Open Type 1 SPD Listed

Location of Use:	Sub-Distribution Boards
Network Systems:	TN-C
Mode of Protection:	L-PEN
IEC/EN/UL Category:	Class II / Type 2 / Type 1CA Open Type 1 SPD Listed
Housing:	Pluggable Design
Compliance:	IEC 61643-11:2011 EN 61643-11:2012+A11:2018 UL 1449 5th Edition

Technical Data

ProTec T2-xxx-3+0(-R) & ProTec T2-xxx-3+0-US(-R)		150	300	350	440**	480	550***	750
IEC Electrical								
Nominal AC Voltage (50/60Hz)	U_o/U_n	120V	240V	277V	230V	400V	480V	600V
Maximum Continuous Operating Voltage (AC)	U_c	150V	300V	350V	440V	480V	550V	750V
Nominal Discharge Current (8/20µs)	I_n	20kA	20kA	20kA	20kA	20kA	20kA	20kA
Maximum Discharge Current (8/20µs)	I_{max}	50kA	50kA	50kA	50kA	50kA	50kA	35kA
Voltage Protection Level	U_p	1250V	1500V	1750V	1800V	2300V	2500V	3400V
Response Time	t_A	< 25ns						
Overcurrent Protection (max)		315A / 250A gG						
Short-Circuit Current Rating (AC)	I_{SCCR}	25kA / 50kA						
TOV Withstand 5s	U_T	229V	337V	403V	440V	581V	697V	871V
TOV 120min	U_T	229V	442V	529V	440V	762V	915V	1143V
	mode	Withstand	Safe Fail	Safe Fail	Withstand	Safe Fail	Safe Fail	Safe Fail
Number of Ports		1						
UL Electrical								
Maximum Continuous Operating Voltage (AC)	MCOV	150V	300V	350V	-	480V	550V	750V
Voltage Protection Rating	VPR	600V	900V	1000V	-	1500V	2000V	2500V
Nominal Discharge Current (8/20µs)	I_n	20kA	20kA	20kA	-	20kA	20kA	20kA
Short-Circuit Current Rating (AC)	SCCR	200kA	150kA	200kA	-	200kA	200kA	200kA
Additional Electrical Parameters - Standard *(Tests performed within Raycap testing laboratory only)*								
Residual Voltage at 5 kA (8/20 µs)	U_{res}	750V	1000V	1300V	1400V	1500V	1800V	2500V
Overcurrent Protection (min)		80A gG						
Additional Electrical Parameters - Extended *(Additionally tested by VDE)*								
Short-Circuit Current Rating (AC)	I_{SCCR}	100kA						
Overcurrent Protection (max)		250A gG						
Mechanical & Environmental								
Operating Temperature Range	T_a	-40 °F to +185 °F [-40 °C to +85 °C]						
Permissible Operating Humidity	RH	5%...95%						
Altitude (max)		13123 ft [4000m]						
Terminal Screw Torque	M_{max}	35 lbf·in per UL 1499 [4.5 Nm]						
Conductor Cross Section (max)		6AWG (Solid, Stranded) per UL 1449						
		35mm² (Solid, Stranded) / 25mm² (Flexible)						
Mounting		35mm DIN Rail, EN 60715						
Degree of Protection		IP 20 (built-in)						
Housing Material		Thermoplastic: Extinguishing Degree UL 94 V-0						
Thermal Protection		Yes						
Operating State / Fault Indication		Green Flag / Not Green Flag						
Remote Contacts (RC)		Optional						
RC Switching Capacity		AC: 250V/1A, 125V/1A; DC: 48V/0.5A, 24V/0.5A, 12V/0.5A						
RC Conductor Cross Section (max)		10AWG (Solid, Stranded) per UL 1449 [1.5mm² (Solid)]						

***No VDE and UL certification.*
****No VDE certification.*

Technical Data includes technical values for both UL Recognized and Open Type 1 UL Listed products.
Mechanical Data includes only techincal values for Open Type 1 UL Listed products.
Connection Configurations can be found in QR Code link on intro page.

RoHS COMPLIANT

Raycap

www.raycap.com

Information contained in this document is subject to change at any time without notice.

Internal Configuration

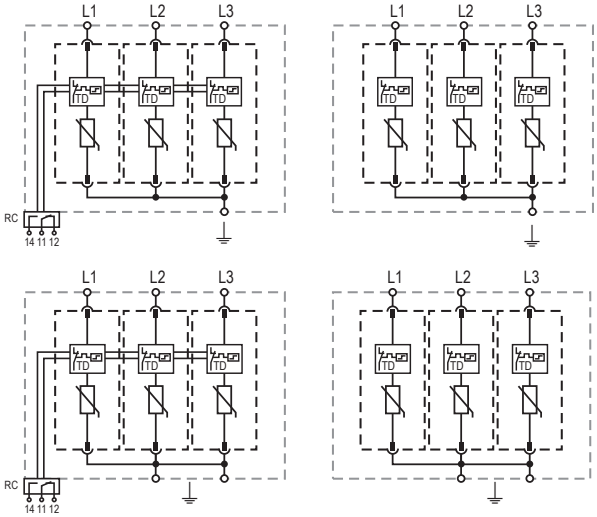

UL Listed Products

UL Recognized Products

Legend

L	*Line Conductor Terminal*
⏚	*PEN/G Conductor Terminal*
RC	*Remote Contacts Terminal (Optional)*
TD	*Thermal Disconnector*

ProTec T2-xxx-3+0(-R)

Order Information VDE Certified and UL Recognized Products

Order Code	150	300	350	440**	480	550***	750
ProTec T2-xxx-3+0	59.0091	59.0093	59.0095	59.0550	59.0097	59.0681	59.0099
ProTec T2-xxx-3+0-R (with remote contacts)	59.0092	59.0094	59.0096	59.0551	59.0098	59.0682	59.0100
ProTec T2-xxx-P (plug)	59.0064	59.0065	59.0066	59.0547	59.0067	59.0685	59.0068

ProTec T2-xxx-3+0-US(-R)

For UL Listed products one PE/G Conductor Terminal is covered/closed.

Order Information VDE Certified and Open Type 1 UL Listed Products

Order Code	150	300	350	440**	480	550***	750
ProTec T2-xxx-3+0-US	59.B099	59.B101	59.B103	-	59.B105	59.B107	59.B109
ProTec T2-xxx-3+0-US-R (with remote contacts)	59.B100	59.B102	59.B104	-	59.B106	59.B108	59.B110
ProTec T2-xxx-P (plug)	59.0064	59.0065	59.0066	59.0547	59.0067	59.0685	59.0068

***No VDE and UL certification.*
****No VDE certification.*

Dimensions & Packaging

inches [mm]

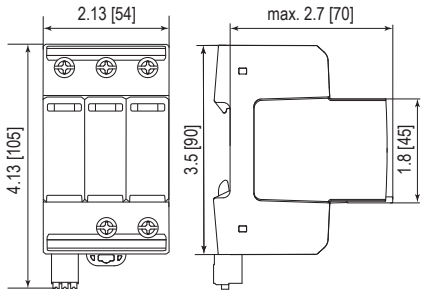

Complete Unit UL Rcognized Products

ProTec T2-xxx-3+0		150	300	350	440**	480	550***	750
Weight	pounds	.800	.820	.853	.867	.893	.910	.985
	grams	363	372	387	393	405	413	447
ProTec T2-xxx-3+0-R								
Weight	pounds	.820	.840	.873	.886	.912	.933	1.005
	grams	372	381	396	402	414	423	456

Complete Unit UL Listed Products

ProTec T2-xxx-3+0-US		150	300	350	440**	480	550***	750
Weight	pounds	.780	.800	.833	.847	.873	.890	.965
	grams	354	363	378	384	396	404	438
ProTec T2-xxx-3+0-US-R								
Weight	pounds	.800	.820	.853	.866	.892	.913	.985
	grams	363	372	387	393	405	414	447
DIN 43880 Dimension		3 TE / 2.13" [54]						
Packaging Dimensions (HxWxL)		4.3 × 4.5 × 13.8" [109 × 115 × 352 mm]						
Standard Order Quantity		5 Units						

Spare Plug

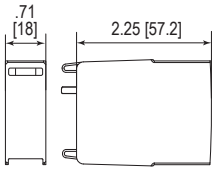

Single Unit

ProTec T2-xxx-P		150	300	350	440**	480	550***	750
Weight	pounds	.123	.130	.141	.146	.154	.163	.185
	grams	56	59	64	66	70	74	84
DIN 43880 Dimension		1 TE / .71" [18]						
Packaging Dimensions (HxWxL)		3.2 × 4.5 × 12" [83 × 116 × 305 mm]						
Standard Order Quantity		24 Units						

© 2022 Raycap All rights reserved.

DATA SHEET

Overvoltage Protection

ProTec T2 4+0

Class II • Type 2 • Type 1CA • Open Type 1 SPD Listed

Location of Use:	Sub-Distribution Boards
Network Systems:	TN-S
Mode of Protection:	L-PE, N-PE
IEC/EN/UL Category:	Class II / Type 2 / Type 1CA Open Type 1 SPD Listed
Housing:	Pluggable Design
Compliance:	IEC 61643-11:2011 EN 61643-11:2012+A11:2018 UL 1449 5th Edition

Technical Data

ProTec T2-xxx-4+0(-R) & ProTec T2-xxx-4+0-US(-R)		150	300	350	440**	480	550***
IEC Electrical							
Nominal AC Voltage (50/60Hz)	U_o/U_n	120V	240V	277V	230V	400V	480V
Maximum Continuous Operating Voltage (AC)	U_c	150V	300V	350V	440V	480V	550V
Nominal Discharge Current (8/20µs)	I_n	20kA	20kA	20kA	20kA	20kA	20kA
Maximum Discharge Current (8/20µs)	I_{max}	50kA	50kA	50kA	50kA	50kA	50kA
Voltage Protection Level	U_p	1250V	1500V	1750V	1800V	2300V	2500V
Response Time	t_A	< 25ns					
Overcurrent Protection (max)		315A / 250A gG					
Short-Circuit Current Rating (AC)	I_{SCCR}	25kA / 50kA					
TOV Withstand 5s	U_T	229V	337V	403V	440V	581V	697V
TOV 120min	U_T	229V	442V	529V	440V	762V	915V
	mode	Withstand	Safe Fail	Safe Fail	Withstand	Safe Fail	Safe Fail
Number of Ports		1					
UL Electrical							
Maximum Continuous Operating Voltage (AC)	MCOV	150V	300V	350V	-	480V	550V
Voltage Protection Rating	VPR	600V	900V	1000V	-	1500V	2000V
Nominal Discharge Current (8/20µs)	I_n	20kA	20kA	20kA	-	20kA	20kA
Short-Circuit Current Rating (AC)	SCCR	200kA	150kA	200kA	-	200kA	200kA
Additional Electrical Parameters - Standard *(Tests performed within Raycap testing laboratory only)*							
Residual Voltage at 5 kA (8/20 µs)	U_{res}	750V	1000V	1300V	1400V	1500V	1800V
Overcurrent Protection (min)		80A gG					
Additional Electrical Parameters - Extended *(Additionally tested by VDE)*							
Short-Circuit Current Rating (AC)	I_{SCCR}	100kA					
Overcurrent Protection (max)		250A gG					
Mechanical & Environmental							
Operating Temperature Range	T_a	-40 °F to +185 °F [-40 °C to +85 °C]					
Permissible Operating Humidity	RH	5%...95%					
Altitude (max)		13123 ft [4000m]					
Terminal Screw Torque	M_{max}	35 lbf·in per UL 1499 [4.5 Nm]					
Conductor Cross Section (max)		6AWG (Solid, Stranded) per UL 1449					
		35mm² (Solid, Stranded) / 25mm² (Flexible)					
Mounting		35mm DIN Rail, EN 60715					
Degree of Protection		IP 20 (built-in)					
Housing Material		Thermoplastic: Extinguishing Degree UL 94 V-0					
Thermal Protection		Yes					
Operating State / Fault Indication		Green Flag / Not Green Flag					
Remote Contacts (RC)		Optional					
RC Switching Capacity		AC: 250V/1A, 125V/1A; DC: 48V/0.5A, 24V/0.5A, 12V/0.5A					
RC Conductor Cross Section (max)		10AWG (Solid, Stranded) per UL 1449 [1.5mm² (Solid)]					

***No VDE and UL certification.*
****No VDE certification.*

Technical Data includes technical values for both UL Recognized and Open Type 1 UL Listed products.
Mechanical Data includes only techincal values for Open Type 1 UL Listed products.
Connection Configurations can be found in QR Code link on intro page.

RoHS COMPLIANT

Raycap

www.raycap.com

Information contained in this document is subject to change at any time without notice.

Internal Configuration

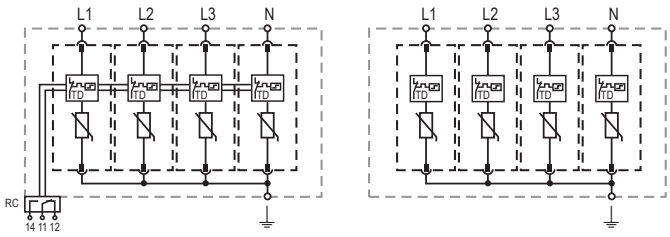

UL Listed Products

Legend

L	*Line Conductor Terminal*
N	*Neutral Conductor Terminal*
⏚	*PE/G Conductor Terminal*
RC	*Remote Contacts Terminal (Optional)*
TD	*Thermal Disconnector*

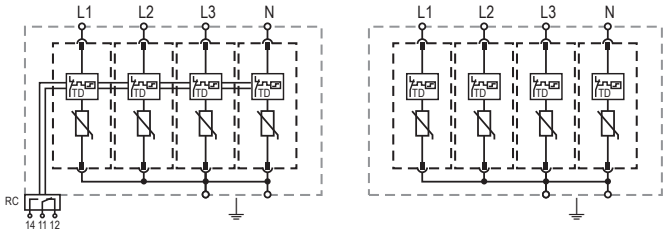

UL Recognized Products

ProTec T2-xxx-4+0(-R)

Order Information VDE Certified and UL Recognized Products

Order Code	150	300	350	440**	480	550***
ProTec T2-xxx-4+0	59.0101	59.0103	59.0300	59.0552	59.0105	59.0683
ProTec T2-xxx-4+0-R (with remote contacts)	59.0102	59.0104	59.0301	59.0553	59.0106	59.0684
ProTec T2-xxx-P (plug)	59.0064	59.0065	59.0066	59.0547	59.0067	59.0685

ProTec T2-xxx-4+0-US(-R)

For UL Listed products one PE/G Conductor Terminal is covered/closed.

Order Information VDE Certified and Open Type 1 UL Listed Products

Order Code	150	300	350	440**	480	550***
ProTec T2-xxx-4+0-US	59.B111	59.B113	59.B115	-	59.B117	59.B119
ProTec T2-xxx-4+0-US-R (with remote contacts)	59.B112	59.B114	59.B116	-	59.B118	59.B120
ProTec T2-xxx-4+0-US-R (plug)	59.0064	59.0065	59.0066	59.0547	59.0067	59.0685

***No VDE and UL certification.*
****No VDE certification.*

Dimensions & Packaging

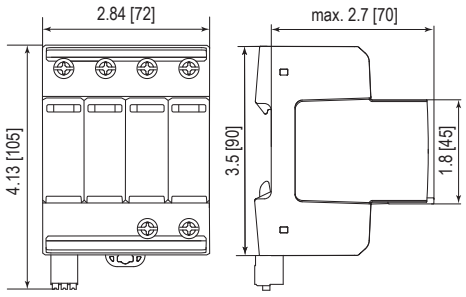

inches [mm]

Complete Unit UL Recognized Products

ProTec T2-xxx-4+0		150	300	350	440**	480	550***
Weight	pounds	1.009	1.035	1.079	1.098	1.132	1.228
	grams	457	469	489	498	513	557
ProTec T2-xxx-4+0-R							
Weight	pounds	1.028	1.055	1.099	1.120	1.152	1.248
	grams	466	478	498	507	522	566

Complete Unit UL Listed Products

ProTec T2-xxx-4+0-US		150	300	350	440**	480	550***
Weight	pounds	.989	1.015	1.059	1.078	1.112	1.208
	grams	448	460	480	489	504	548
ProTec T2-xxx-4+0-US-R							
Weight	pounds	1.008	1.035	1.079	1.100	1.132	1.228
	grams	457	469	489	498	513	557
DIN 43880 Dimension		4 TE / 2.84" [72]					
Packaging Dimensions (HxWxL)		4.3 × 4.5 × 13.8" [109 × 115 × 352 mm]					
Standard Order Quantity		4 Units					

Spare Plug

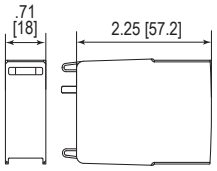

Single Unit

ProTec T2-xxx-P		150	300	350	440**	480	550***
Weight	pounds	.123	.130	.141	.146	.154	.163
	grams	56	59	64	66	70	74
DIN 43880 Dimension		1 TE / .71" [18]					
Packaging Dimensions (HxWxL)		3.2 × 4.5 × 12" [83 × 116 × 305 mm]					
Standard Order Quantity		24 Units					

© 2022 Raycap All rights reserved.

DATA SHEET

Overvoltage Protection

ProTec T2 1+1

Class II • Type 2 • Type 1CA • Open Type 1 SPD Listed

Location of Use:	Sub-Distribution Boards
Network Systems:	TT, TN-S
Mode of Protection:	L-N, N-PE
IEC/EN/UL Category:	Class II / Type 2 / Type 1CA Open Type 1 SPD Listed
Compliance:	IEC 61643-11:2011 EN 61643-11:2012+A11:2018 UL 1449 5th Edition

Technical Data

ProTec T2-xxx-1+1(-R) & ProTec T2-xxx-1+1-US(-R)			75	150	300	350
IEC Electrical						
Nominal AC Voltage (50/60Hz)		U_o/U_n	60 V	120 V	240 V	277 V
Maximum Continuous Operating Voltage (AC)	(L-N)	U_c	75 V	150 V	300 V	350 V
	(N-PE)	U_c	305 V	305 V	305 V	305 V
Nominal Discharge Current (8/20 µs)	(L-N)/(N-PE)	I_n	20 kA / 40 kA	20 kA / 40 kA	20 kA / 40 kA	20 kA / 40 kA
Maximum Discharge Current (8/20 µs)	(L-N)/(N-PE)	I_{max}	50 kA / 65 kA	50 kA / 65 kA	50 kA / 65 kA	50 kA / 65 kA
Voltage Protection Level	(L-N)/(N-PE)	U_p	800 V / 1500 V	1250 V / 1500V	1500 V / 1500 V	1750 V / 1500 V
Follow Current Interrupt Rating	(N-PE)	I_{fi}	100 A			
Response Time	(L-N)/(N-PE)	t_A	< 25 ns / < 100 ns			
Overcurrent Protection (max)			315 A / 250 A gG			
Short-Circuit Current Rating (AC)	(L-N)	I_{SCCR}	25 kA / 50 kA			
TOV Withstand 5s	(L-N)	U_T	114 V	229 V	337 V	403 V
TOV 120min	(L-N)	U_T	114 V	229 V	442 V	529 V
		mode	Withstand	Withstand	Safe Fail	Safe Fail
TOV Withstand 200ms	(N-PE)	U_T	1200V			
Number of Ports			1			
UL Electrical						
Maximum Continuous Operating Voltage (AC)	(L-N)/(N-G)	MCOV	75 V / 305 V	150 V / 305 V	300 V / 305 V	350 V / 305 V
Voltage Protection Rating	(L-N)/(N-G)	VPR	330 V / 1000 V	600 V / 1000 V	900 V / 1000 V	1000 V / 1000 V
Nominal Discharge Current (8/20 µs)	(L-N)/(N-G)	I_n	20 kA / 20 kA			
Short-Circuit Current Rating (AC)	(L-N)	SCCR	100 kA	200 kA	150 kA	200 kA
Additional Electrical Parameters - Standard *(Tests performed within Raycap testing laboratory only)*						
Residual Voltage at 5 kA (8/20 µs)		U_{res}	400 V / 305 V	750 V / 305 V	1000 V / 305 V	1300 V / 305 V
Overcurrent Protection (min)			80 A gG			
Additional Electrical Parameters - Extended *(Additionally tested by VDE)*						
Short-Circuit Current Rating (AC)		I_{SCCR}	100 kA			
Overcurrent Protection (max)			250 A gG			
Mechanical & Environmental						
Operating Temperature Range		T_a	-40 °F to +185 °F [-40 °C to +85 °C]			
Permissible Operating Humidity		RH	5%...95%			
Altitude (max)			13123 ft [4000 m]			
Terminal Screw Torque		M_{max}	35 lbf·in per UL 1499 [4.5 Nm]			
Conductor Cross Section (max)			6 AWG (Solid, Stranded) per UL 1449			
			35 mm² (Solid, Stranded) / 25 mm² (Flexible)			
Mounting			35 mm DIN Rail, EN 60715			
Degree of Protection			IP 20 (built-in)			
Housing Material			Thermoplastic: Extinguishing Degree UL 94 V-0			
Thermal Protection			Yes			
Operating State / Fault Indication			Green Flag / Not Green Flag			
Remote Contacts (RC)			Optional			
RC Switching Capacity			AC: 250 V / 1 A, 125 V / 1 A; DC: 48 V / 0.5 A, 24 V / 0.5 A, 12 V / 0.5 A			
RC Conductor Cross Section (max)			10 AWG (Solid, Stranded) per UL 1449 [1.5 mm² (Solid)]			

Technical Data includes technical values for both UL Recognized and Open Type 1 UL Listed products.
Mechanical Data includes only techincal values for Open Type 1 UL Listed products.
Connection Configurations can be found in QR Code link on intro page.

RoHS COMPLIANT

Information contained in this document is subject to change at any time without notice.

Internal Configuration

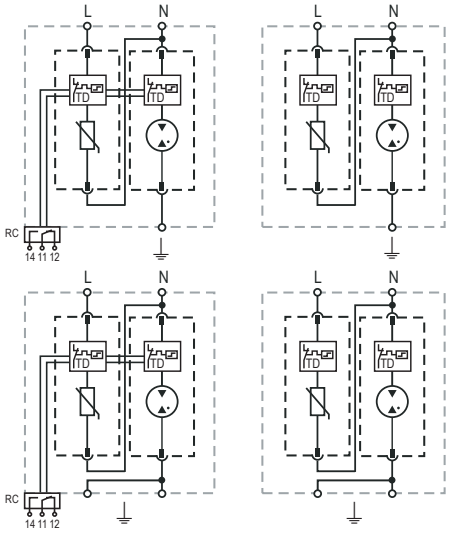

UL Listed Products

UL Recognized Products

Legend

L	*Line Conductor Terminal*
N	*Neutral Conductor Terminal*
⏚	*PE/G Conductor Terminal*
RC	*Remote Contacts Terminal (Optional)*
TD	*Thermal Disconnector*

ProTec T2-xxx-1+1(-R)

Order Information VDE Certified and UL Recognized Products

Order Code	75	150	300	350
ProTec T2-xxx-1+1	59.0109	59.0111	59.0113	59.0115
ProTec T2-xxx-1+1-R (with remote contacts)	59.0110	59.0112	59.0114	59.0116
ProTec T2-xxx-P (plug L-N)	59.0063	59.0064	59.0065	59.0066
ProTube T2-40-P (plug N-PE)	59.0273	59.0273	59.0273	59.0273

ProTec T2-xxx-1+1-US(-R)

For UL Listed products one PE/G Conductor Terminal is covered/closed.

Order Information VDE Certified and Open Type 1 UL Listed Products

Order Code	75	150	300	350
ProTec T2-xxx-1+1-US	59.B121	59.B123	59.B125	59.B127
ProTec T2-xxx-1+1-US-R (with remote contacts)	59.B122	59.B124	59.B126	59.B128
ProTec T2-xxx-P (plug L-N)	59.0063	59.0064	59.0065	59.0066
ProTube T2-40-P (plug N-PE)	59.0273	59.0273	59.0273	59.0273

Dimensions & Packaging

inches [mm]

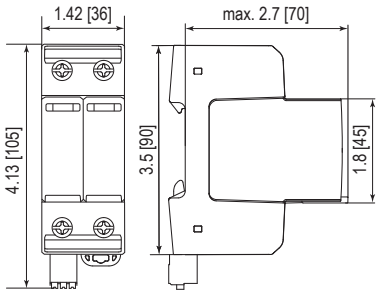

Complete Unit UL Recognized Products					
ProTec T2-xxx-1+1		**75**	**150**	**300**	**350**
Weight	pounds	.532	.547	.554	.565
	grams	241	248	251	256
ProTec T2-xxx-1+1-R					
Weight	pounds	.541	.556	.563	.574
	grams	245	253	255	260
Complete Unit UL Listed Products					
ProTec T2-xxx-1+1-US		**75**	**150**	**300**	**350**
Weight	pounds	.512	.527	.534	.545
	grams	232	239	242	247
ProTec T2-xxx-1+1-US-R					
Weight	pounds	.521	.536	.543	.554
	grams	236	243	246	251
DIN 43880 Dimension		2 TE / 1.42" [36]			
Packaging Dimensions (HxWxL)		4.3 × 4.5 × 13.8" [109 × 115 × 352 mm]			
Standard Order Quantity		7 Units			

Spare Plug

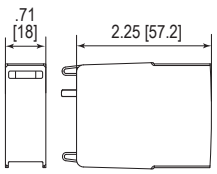

Single Unit					
ProTec T2-xxx-P		**75**	**150**	**300**	**350**
Weight	pounds	.108	.123	.130	.141
	grams	49	56	59	64
ProTube T2-40-P		**40**			
Weight	pounds	.093			
	grams	42			
DIN 43880 Dimension		1 TE / .71" [18]			
Packaging Dimensions (HxWxL)		3.2 × 4.5 × 12" [83 × 116 × 305 mm]			
Standard Order Quantity		24 Units			

© 2022 Raycap All rights reserved.

DATA SHEET

Overvoltage Protection

ProTec T2 3+1

Class II • Type 2 • Type 1CA • Open Type 1 SPD Listed

Location of Use: Sub-Distribution Boards
Network Systems: TT, TN-S
Mode of Protection: L-N, N-PE
IEC/EN/UL Category: Class II / Type 2 / Type 1CA
Open Type 1 SPD Listed
Housing: Pluggable Design
Compliance: IEC 61643-11:2011
EN 61643-11:2012+A11:2018
UL 1449 5th Edition

Technical Data

ProTec T2-xxx-3+1(-R) & ProTec T2-xxx-3+1-US(-R)			300	350
IEC Electrical				
Nominal AC Voltage (50/60Hz)		U_o/U_n	240 V	277 V
Maximum Continuous Operating Voltage (AC)	(L-N)	U_c	300 V	350 V
	(N-PE)	U_c	305 V	305 V
Nominal Discharge Current (8/20 µs)	(L-N)/(N-PE)	I_n	20 kA / 40 kA	20 kA / 40 kA
Maximum Discharge Current (8/20 µs)	(L-N)/(N-PE)	I_{max}	50 kA / 65 kA	50 kA / 65 kA
Voltage Protection Level	(L-N)/(N-PE)	$U_{p.}$	1500 V / 1500 V	1750 V / 1500 V
Follow Current Interrupt Rating	(N-PE)	I_{fi}	100 A	
Response Time	(L-N)/(N-PE)	t_A	< 25 ns / < 100 ns	
Overcurrent Protection (max)			315 A / 250 A gG	
Short-Circuit Current Rating (AC)	(L-N)	I_{SCCR}	25 kA / 50 kA	
TOV Withstand 5s	(L-N)	U_T	337 V	403 V
TOV 120min	(L-N)	U_T	442 V	529 V
		mode	Safe Fail	Safe Fail
TOV Withstand 200ms	(N-PE)	U_T	1200V	
Number of Ports			1	
UL Electrical				
Maximum Continuous Operating Voltage (AC)	(L-N)/(N-G)	MCOV	300 V / 305 V	350 V / 305 V
Voltage Protection Rating	(L-N)/(N-G)	VPR	900 V / 1000 V	1000 V / 1000 V
Nominal Discharge Current (8/20 µs)	(L-N)/(N-G)	I_n	20 kA / 20 kA	
Short-Circuit Current Rating (AC)	(L-N)	SCCR	150 kA	200 kA
Additional Electrical Parameters - Standard *(Tests performed within Raycap testing laboratory only)*				
Residual Voltage at 5 kA (8/20 µs)		U_{res}	1000 V / 305 V	1300 V / 305 V
Overcurrent Protection (min)			80 A gG	
Additional Electrical Parameters - Extended *(Additionally tested by VDE)*				
Short-Circuit Current Rating (AC)		I_{SCCR}	100 kA	
Overcurrent Protection (max)			250 A gG	
Mechanical & Environmental				
Operating Temperature Range		T_a	-40 °F to +185 °F [-40 °C to +85 °C]	
Permissible Operating Humidity		RH	5%...95%	
Altitude (max)			13123 ft [4000 m]	
Terminal Screw Torque		M_{max}	35 lbf·in per UL 1499 [4.5 Nm]	
Conductor Cross Section (max)			6 AWG (Solid, Stranded) per UL 1449	
			35 mm² (Solid, Stranded) / 25 mm² (Flexible)	
Mounting			35 mm DIN Rail, EN 60715	
Degree of Protection			IP 20 (built-in)	
Housing Material			Thermoplastic: Extinguishing Degree UL 94 V-0	
Thermal Protection			Yes	
Operating State / Fault Indication			Green Flag / Not Green Flag	
Remote Contacts (RC)			Optional	
RC Switching Capacity			AC: 250 V / 1 A, 125 V / 1 A; DC: 48 V / 0.5 A, 24 V / 0.5 A, 12 V / 0.5 A	
RC Conductor Cross Section (max)			10 AWG (Solid, Stranded) per UL 1449 [1.5 mm² (Solid)]	

Technical Data includes technical values for both UL Recognized and Open Type 1 UL Listed products.
Mechanical Data includes only techincal values for Open Type 1 UL Listed products.
Connection Configurations can be found in QR Code link on intro page.

RoHS COMPLIANT

Information contained in this document is subject to change at any time without notice.

Internal Configuration

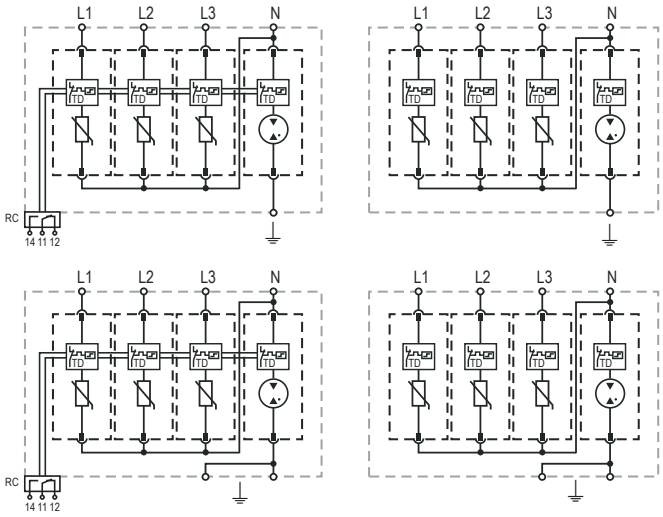

UL Listed Products

UL Recognized Products

Legend

L	*Line Conductor Terminal*
N	*Neutral Conductor Terminal*
⏚	*PE/G Conductor Terminal*
RC	*Remote Contacts Terminal (Optional)*
TD	*Thermal Disconnector*

ProTec T2-xxx-3+1(-R)

Order Information VDE Certified and UL Recognized Products

Order Code	300	350
ProTec T2-xxx-3+1	59.0121	59.0123
ProTec T2-xxx-3+1-R (with remote contacts)	59.0122	59.0124
ProTec T2-xxx-P (plug L-N)	59.0065	59.0066
ProTube T2-40-P (plug N-PE)	59.0273	59.0273

ProTec T2-xxx-3+1-US(-R)

For UL Listed products one PE/G Conductor Terminal is covered/closed.

Order Information VDE Certified and Open Type 1 UL Listed Products

Order Code	300	350
ProTec T2-xxx-3+1-US	59.B129	59.B131
ProTec T2-xxx-3+1-US-R (with remote contacts)	59.B130	59.B132
ProTec T2-xxx-P (plug L-N)	59.0065	59.0066
ProTube T2-40-P (plug N-PE)	59.0273	59.0273

Dimensions & Packaging

inches [mm]

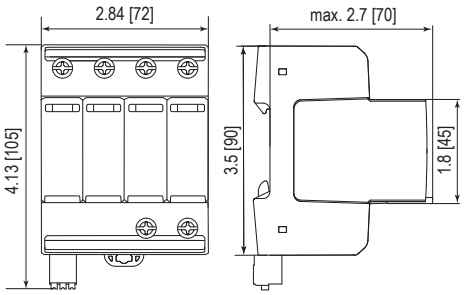

Complete Unit UL Recognized Products			
ProTec T2-xxx-3+1		**300**	**350**
Weight	pounds	1.020	1.053
	grams	462	477
ProTec T2-xxx-3+1-R			
Weight	pounds	1.031	1.064
	grams	467	482

Complete Unit UL Listed Products			
ProTec T2-xxx-3+1-US		**300**	**350**
Weight	pounds	1.000	1.033
	grams	453	468
ProTec T2-xxx-3+1-US-R			
Weight	pounds	1.011	1.044
	grams	458	473
DIN 43880 Dimension		4 TE / 2.84" [72]	
Packaging Dimensions (HxWxL)		4.3 x 4.5 x 13.8" [109 x 115 x 352 mm]	
Standard Order Quantity		4 Units	

Spare Plug

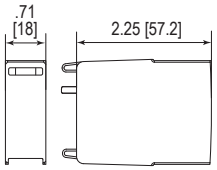

Single Unit			
ProTec T2-xxx-P		**300**	**350**
Weight	pounds	.130	.141
	grams	59	64
ProTube T2-40-P		**40**	
Weight	pounds	.093	
	grams	42	
DIN 43880 Dimension		1 TE / .71" [18]	
Packaging Dimensions (HxWxL)		3.2 x 4.5 x 12" [83 x 116 x 305 mm]	
Standard Order Quantity		24 Units	

© 2022 Raycap All rights reserved.

DATA SHEET

Overvoltage Protection

ProTube T2 40 0+1

Class II • Type 2 • Type 1CA • Open Type 1 SPD Listed

Location of Use:	Sub-Distribution Boards
Network Systems:	TT, TN-S
Mode of Protection:	N-PE
IEC/EN/UL Category:	Class II / Type 2 / Type 1CA Open Type 1 SPD Listed
Housing:	Pluggable Design
Compliance:	IEC 61643-11:2011 EN 61643-11:2012+A11:2018 UL 1449 5th Edition

Technical Data

ProTube T2-xxx-0+1(-R) & ProTube T2-xxx-0+1-US(-R)		40
IEC Electrical		
Maximum Continuous Operating Voltage	U_c	305V
Nominal Discharge Current (8/20 µs)	I_n	40 kA
Maximum Discharge Current (8/20 µs)	I_{max}	65 kA
Voltage Protection Level	U_p	1500 V
Follow Current Interrupt Rating	I_{fi}	100 A
Response Time	t_A	< 100 ns
TOV Withstand 200ms	U_T	1200 V
Number of Ports		1
UL Electrical		
Maximum Continuous Operating Voltage (AC)	MCOV	305V
Voltage Protection Rating	VPR	1000V
Nominal Discharge Current (8/20 µs)	I_n	20 kA
Additional Electrical Parameters - Standard *(Tests performed within Raycap testing laboratory only)*		
Residual Voltage at 5 kA (8/20 µs)	U_{res}	305V
Mechanical & Environmental		
Operating Temperature Range	T_a	-40 °F to +185 °F [-40 °C to +85 °C]
Permissible Operating Humidity	RH	5%...95%
Altitude (max)		13123 ft [4000 m]
Terminal Screw Torque	M_{max}	35 lbf·in per UL 1499 [4.5 Nm]
Conductor Cross Section (max)		6 AWG (Solid, Stranded) per UL 1449
		35 mm² (Solid, Stranded) / 25 mm² (Flexible)
Mounting		35 mm DIN Rail, EN 60715
Degree of Protection		IP 20 (built-in)
Housing Material		Thermoplastic: Extinguishing Degree UL 94 V-0
Thermal Protection		Yes
Operating State / Fault Indication		Green Flag / Not Green Flag
Remote Contacts (RC)		Optional
RC Switching Capacity		AC: 250 V / 1A, 125 V / 1 A; DC: 48 V / 0.5 A, 24 V / 0.5 A, 12 V / 0.5 A
RC Conductor Cross Section (max)		10 AWG (Solid, Stranded) per UL 1449 [1.5 mm² (Solid)]

Technical Data includes technical values for both UL Recognized and Open Type 1 UL Listed products.
Mechanical Data includes only techincal values for Open Type 1 UL Listed products.
Connection Configurations can be found in QR Code link on intro page.

RoHS COMPLIANT

Information contained in this document is subject to change at any time without notice.

Internal Configuration

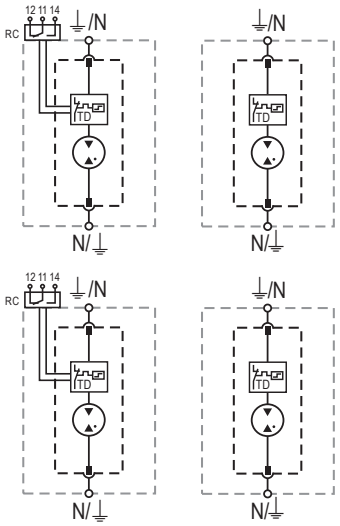

Legend

N	*Neutral Conductor Terminal*
⏚	*PE/G Conductor Terminal*
RC	*Remote Contacts Terminal (Optional)*
TD	*Thermal Disconnector*

ProTube T2-xxx-0+1(-R)

Order Information VDE Certified and UL Recognized Products	
Order Code	**40**
ProTube T2-xxx-0+1	59.0280
ProTube T2-xxx-0+1-R (with remote contacts)	59.0336
ProTube T2-40-P (plug)	59.0273

ProTube T2-xxx-0+1-US(-R)

Order Information VDE Certified and Open Type 1 UL Listed Products	
Order Code	**40**
ProTube T2-xxx-0+1-US	59.B133
ProTube T2-xxx-0+1-US-R (with remote contacts)	59.B134
ProTube T2-40-P (plug)	59.0273

Dimensions & Packaging

inches [mm]

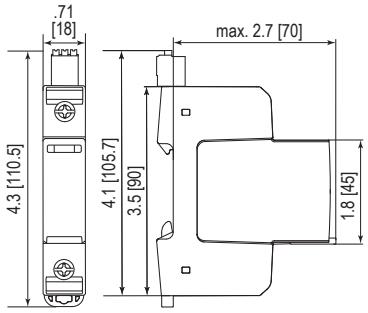

Complete Unit UL Recognized Products		
ProTube T2-xxx-0+1		**40**
Weight	pounds	.244
	grams	111
ProTube T2-xxx-0+1-R		
Weight	pounds	.259
	grams	118
Complete Unit UL Listed Products		
ProTube T2-xxx-0+1-US		**40**
Weight	pounds	.244
	grams	111
ProTube T2-xxx-0+1-US-R		
Weight	pounds	.259
	grams	118
DIN 43880 Dimension		1 TE / .71" [18]
Packaging Dimensions (HxWxL)		4.3 × 4.5 × 13.8" [109 × 115 × 352 mm]
Standard Order Quantity		12 Units

Spare Plug

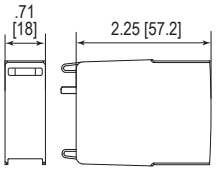

Single Unit		
ProTube T2-40-P		**40**
Weight	pounds	.093
	grams	42
DIN 43880 Dimension		1 TE / .71" [18]
Packaging Dimensions (HxWxL)		3.2 × 4.5 × 12" [83 × 116 × 305 mm]
Standard Order Quantity		24 Units

© 2022 Raycap All rights reserved.